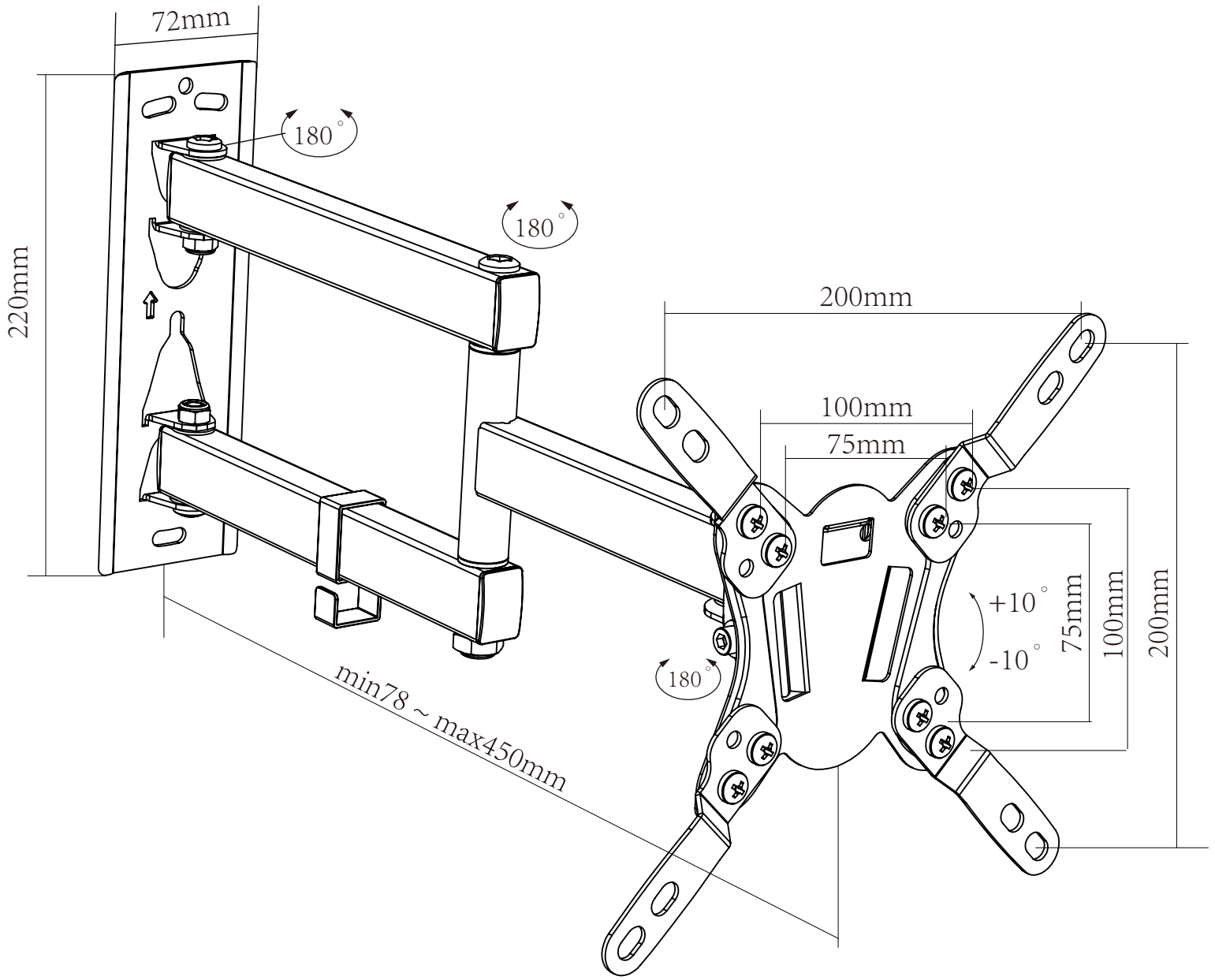
72mm
220mm
180°
180°
180°
200mm
100mm
75mm
+10°
-10°
75mm
100mm
200mm
min78 ~ max450mm